NEC
ELECTRON DEVICE

BIPOLAR ANALOG INTEGRATED CIRCUIT

μPC1252H2

VCA FOR dbx NOISE REDUCTION SYSTEM

DESCRIPTION

The μPC1252H2 is dbx noise reduction system VCA (Voltage Controlled Amplifier), used in tape deck and other audio equipment.

The μPC1252H2 features excellent lineality VCA for wider input level due to NEC's super low noise and high h_{FE} NPN/PNP, complementary process.

Since the package is 8 pin SIP. It can be built in a compact set.

PACKAGE DIMENSIONS

in millimeters (inches)

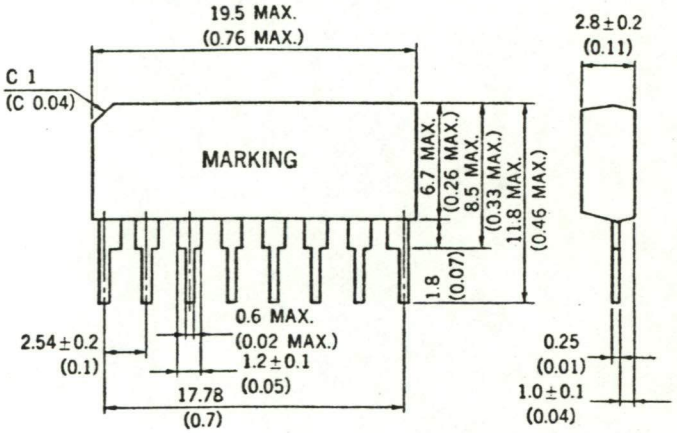

FEATURES

- Wide operating supply voltage — V_{CC} = ±4 to ±15 V (TYP. ±12 V)
- Excellent lineality Control Constant — V_C = −5.9 mV/dB (A_V = −30 dB to +30 dB)
- Low total hamonic distortion — T.H.D. = 0.01 % TYP. (V_{CC} = ±12 V, f = 1 kHz, V_O = 0 dBV)
- Low noise — NV_O = −94 dBV TYP. (V_{CC} = ±12 V, R_{IN} = 33.2 kΩ, A_V = 0 dB, BPF = 10 Hz to 20 kHz)

FUNCTIONAL BLOCK DIAGRAM

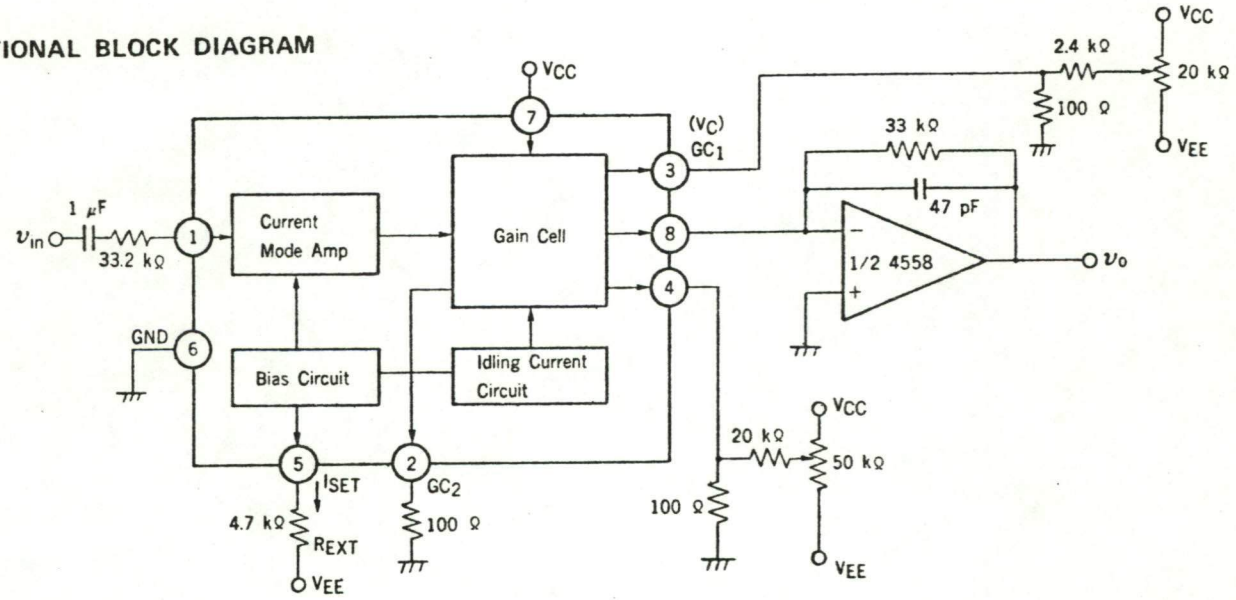

ABSOLUTE MAXIMUM RATINGS ($T_a = 25\,°C$)

Supply Voltage	V_{CC}, V_{EE}	+15	V
Supply Current	I_{CC}	30	mA
Power Dissipation	P_D	330*	mW
Operating Temperature Range	T_{opt}	−20 to +75	°C
Storage Temperature Range	T_{stg}	−40 to +125	°C

* Value at $T_a = 75\,°C$

RECOMMENDED OPERATING CONDITIONS

CHARACTERISTIC	SYMBOL	MIN.	TYP.	MAX.	UNIT
Operating Supply Voltage	V_{CC}, V_{EE}**	±4	±12	±15	V
Bias Current	I_{SET}	–	2.0	–	mA
Input Level Range	v_{in}	−40		+10	dBV

** See Note

ELECTRICAL CHARACTERISTICS ($T_a = 25\,°C$, $V_{CC} = +12$ V, $V_{EE} = -12$ V, $I_{SET} = 2$ mA, $R_{IN} = R_{OUT} = 33\,k\Omega$, f = 1 kHz)

CAHRACTERISTIC	SYMBOL	MIN.	TYP.	MAX.	UNIT	TEST CONDITIONS
Supply Current	I_{CC}	1.0	2.0	3.0	mA	Non Signal
Equivalent Input Bias Current	I_{IN}		6	20	nA	Non Signal
Gain Cell Idling Current	I_{DLE}		20		μA	Non Signal
Gain Cell Offset Voltage	V_{OFF}		±0.5		mV	$A_v = 0$ dB, T.H.D. ≦ 0.07 %
Control Constant	V_C	−5.8	−5.9	−6.1	mV/dB	$A_v = -30$ dB to +30 dB
Total Harmonic Distortion	T.H.D.1		0.007	0.07	%	$A_v = 0$ dB, $V_o = 0$dBV, BPF = 400 Hz to 5 kHz
Total Harmonic Distortion	T.H.D.2		0.02	0.10	%	$A_v = +20$ dB, $V_o = 0$dBV, BPF = 400 Hz to 5 kHz
Total Harmonic Distortion	T.H.D.3		0.02	0.15	%	$A_v = -20$ dB, $V_{in} = 0$dBV, BPF = 400 Hz to 5 kHz
Output Noise Level	NV		−94	−84	dBV	$A_v = 0$ dB, $R_{IN} = 33\,k\Omega$, BPF = 10 Hz to 20 kHz
Symmetry Control Voltage	V_{SYM}	−4	0	+4	mV	$A_v = 0$ dB, T.H.D. ≦ 0.07 %

Note) V_{CC}, V_{EE} and I_{SET} are defined as follows.

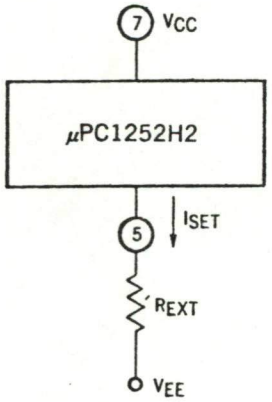

$$I_{SET} = \frac{V_{EE} - 4 \cdot V_{BE}}{R_{EXT}} = \frac{V_{EE} - 2.4}{R_{EXT}} = 2\text{ mA}$$

TEST CIRCUIT

(1) I_{CC}

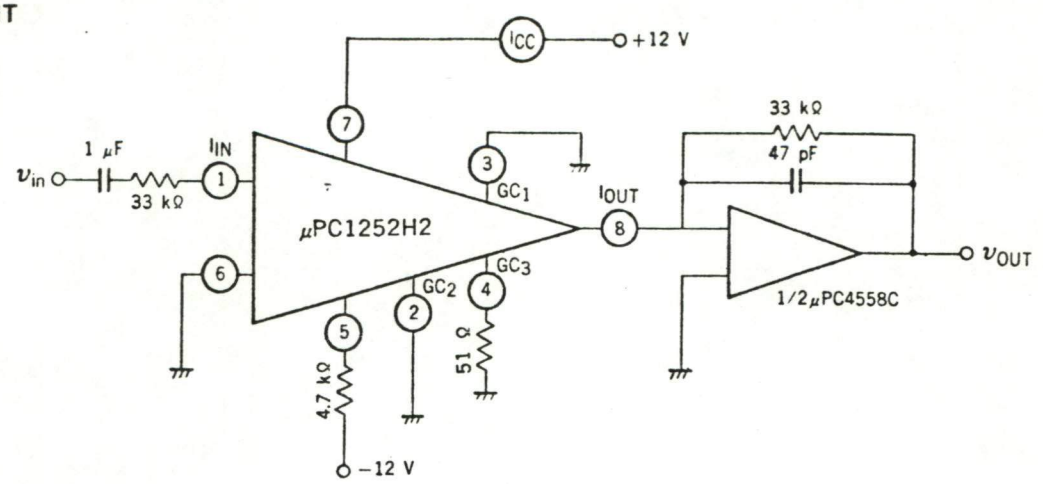

(2) V_C

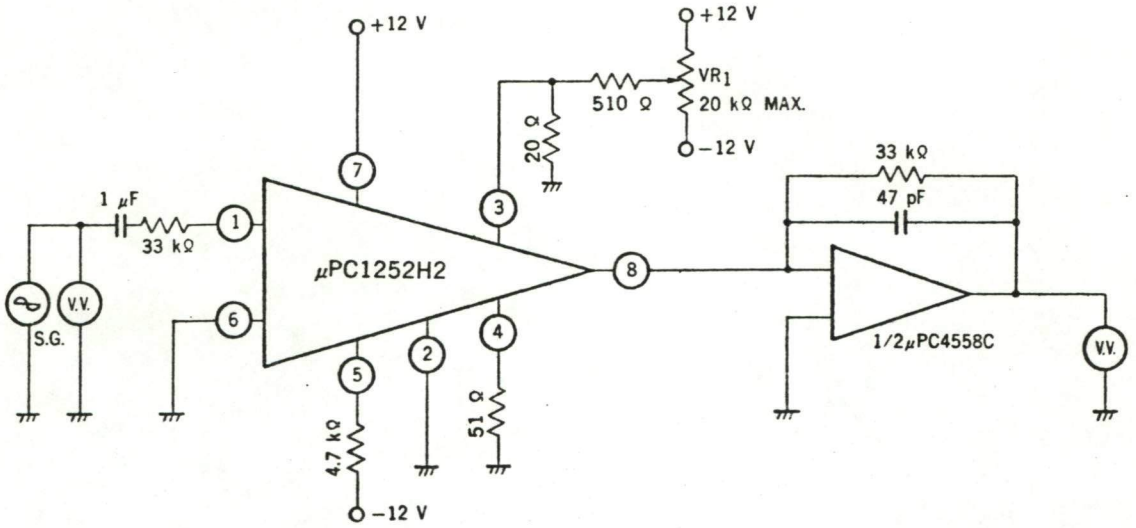

(3) T.H.D. $_{1\sim3}$

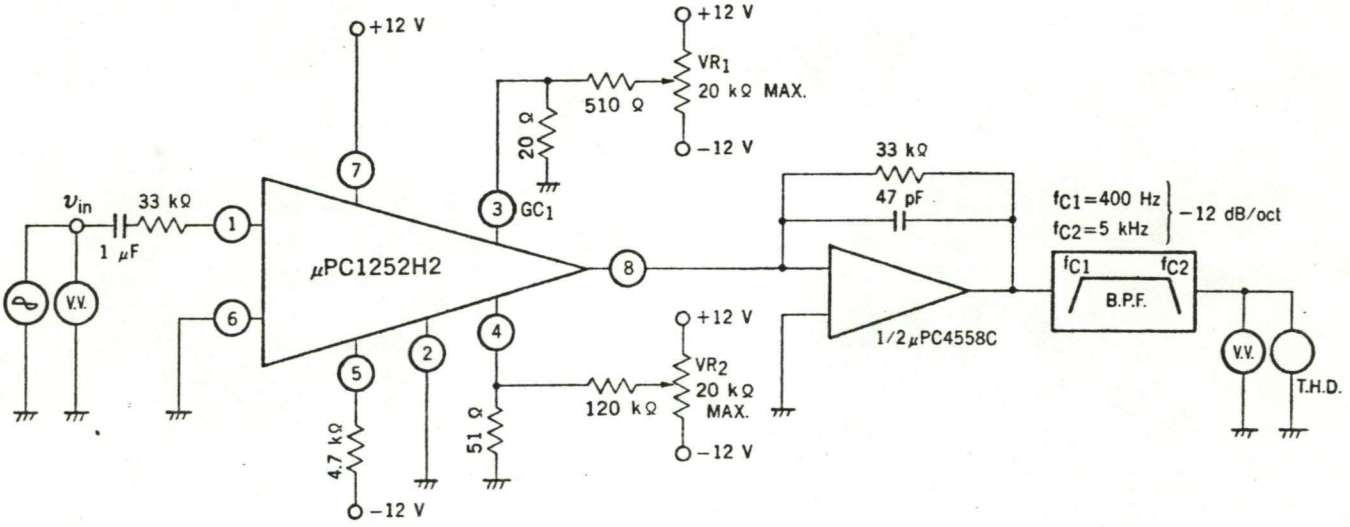

T.H.D.1; Make T.H.D. minimum with VR_2 after adjusting GC1 = 0 mV with VR_1 at V_{in} = 0 dBV

T.H.D.2; Make T.H.D. minimum with VR_2 after adjusting GC1 = −120 mV with VR_1 at V_{in} = −20 dBV

T.H.D.3; Make T.H.D. minimum with VR_2 after adjusting GC1 = +120 mV with VR_1 at V_{in} = 0 dBV

(4) V_{NO}

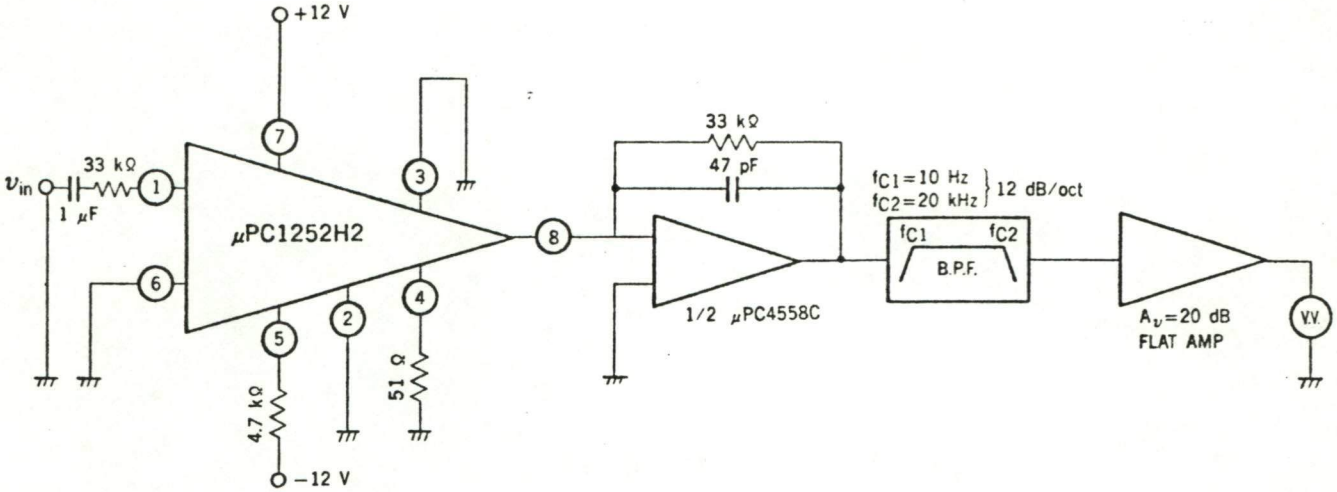

(5) V_{SYM}

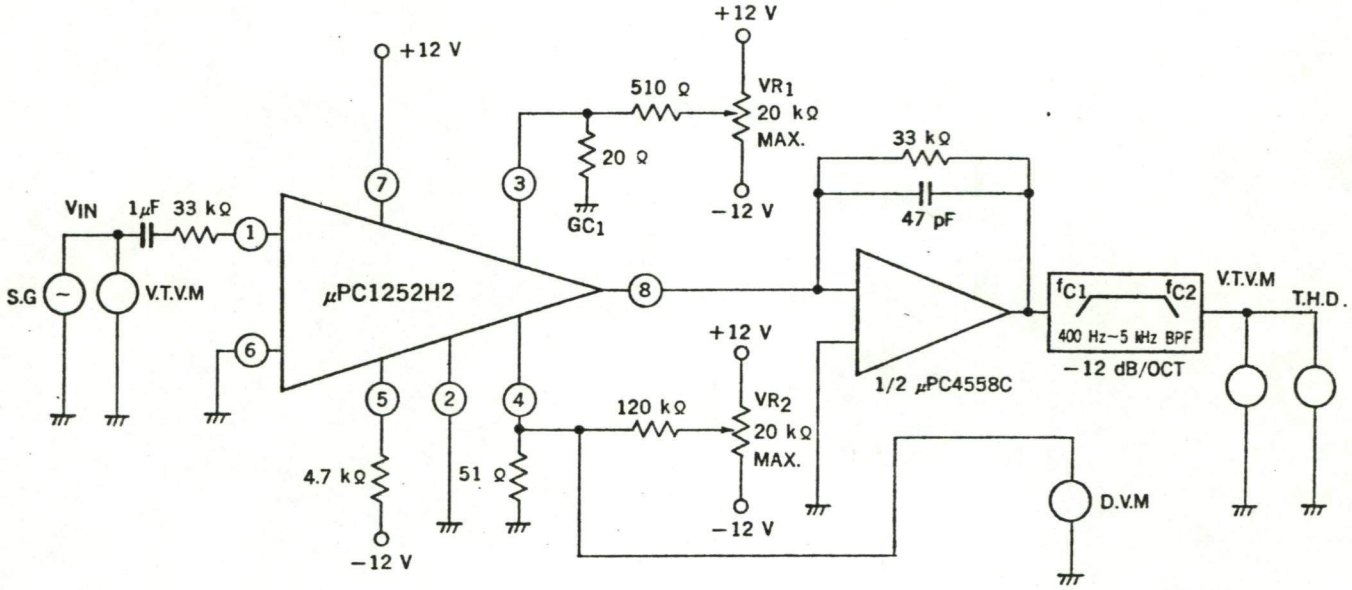

Make T.H.D. minimum with VR_2 after adjusting GC1 = 0 mV with VR_1 at V_{in} = 0 dBV and Measure Symmetry Control Voltage of 4 pin.

VOLTAGE GAIN vs.
CONTROL CONSTANT VOLTAGE

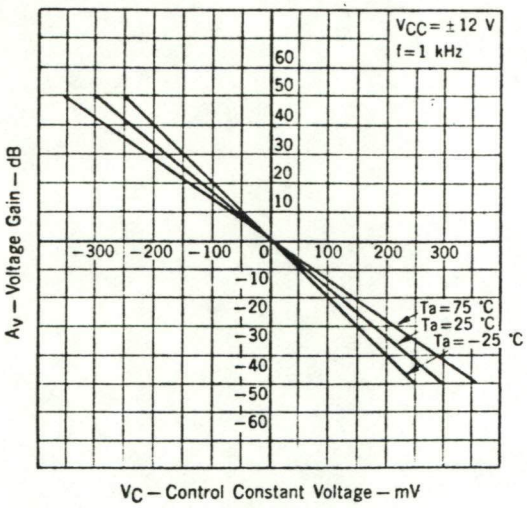

TOTAL HARMONIC DISTORTION vs.
INPUT VOLTAGE and OUTPUT VOLTAGE

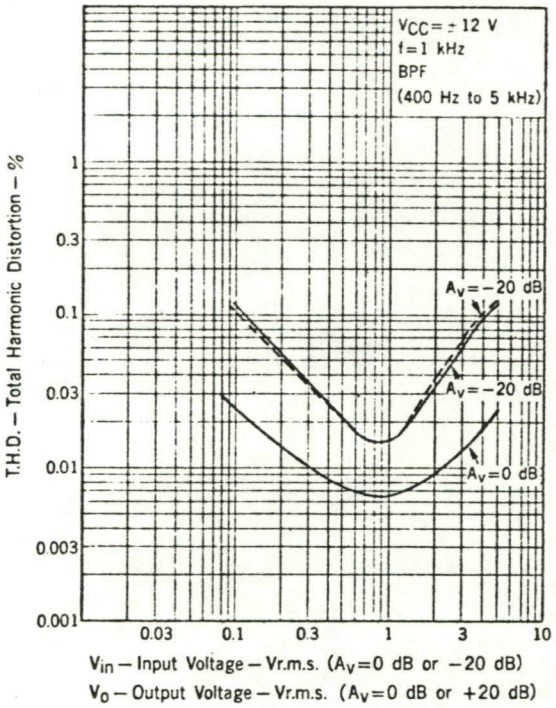

OUTPUT RESPONSE vs. FREQUENCY

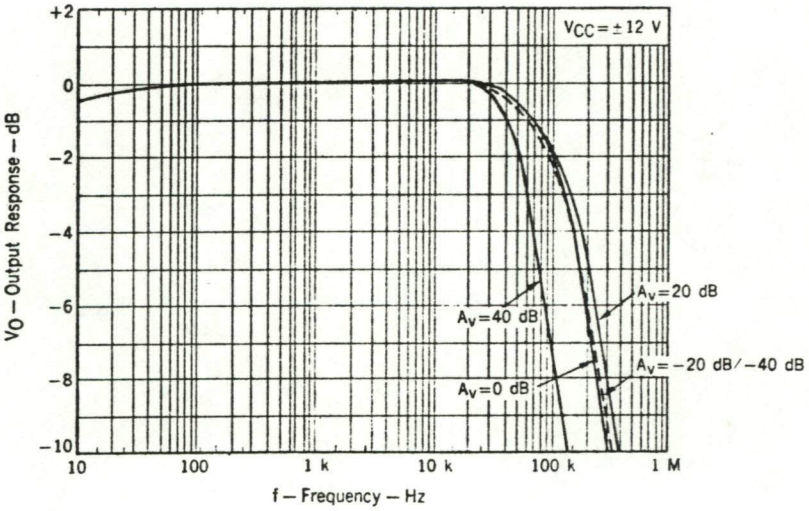

Note for use

1. Since μPC1252H2 is designed for Noise Reduction System, recommend to use μPC1252H2 with μPC1253H2 (RMS Revel Sensor), which controls μPC1252H2, in case of composing dbx NR System.
2. Documents issued by dbx, in corporated have priority over NEC, such as application note or data about dbx NR system.
3. If you plan to use μPC1252H2 except dbx NR system, inform NEC of it as soon as possible.

APPLICATION CIRCUIT

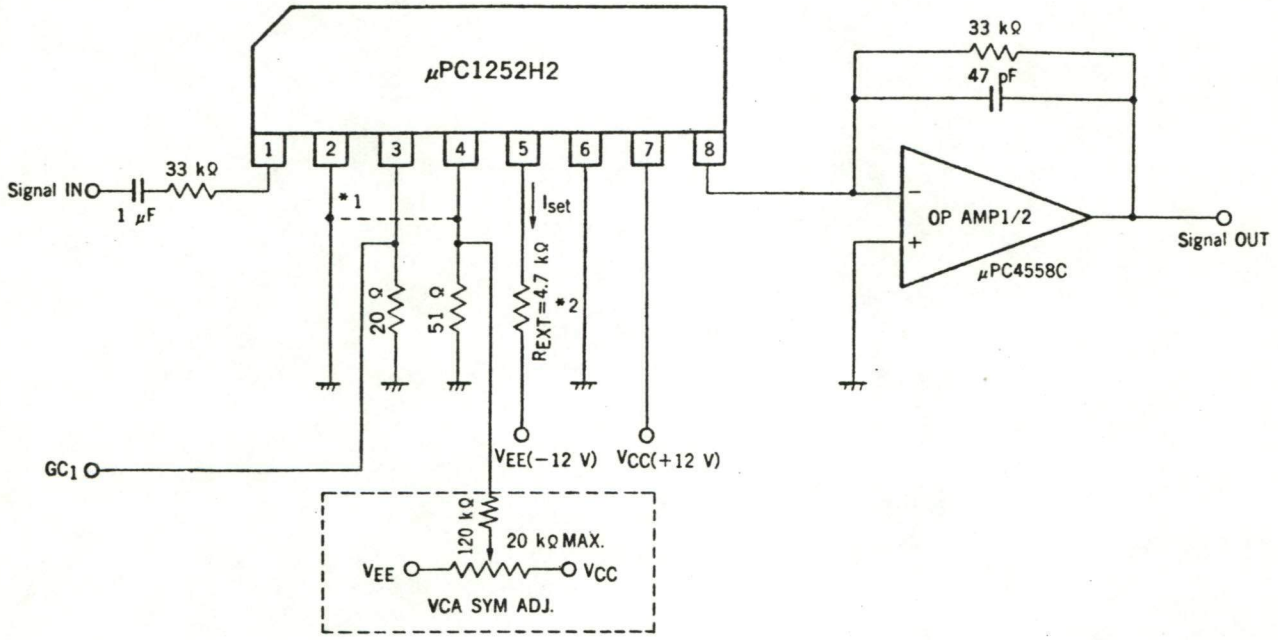

*1. Possible to connect 4 pin to GND in case of using this IC at T.H.D. ≧ 0.05 %.

*2. I_{set} is set to be 2 mA at R_{EXT} = 4.7 kΩ, V_{CC} = 12 V, V_{EE} = −12 V, so readjust R_{EXT} in case that supply voltage is different from above.

GC1 is an input terminal of μPC1252H2 control voltage.

Nippon Electric Co.,Ltd.

NEC Building, 33-1, Shiba Gochome, Minato-ku, Tokyo 108, Japan
Tel: Tokyo 454 – 1111
Telex Address: NECTOK J22686
Cable Address: MICROPHONE TOKYO

IC–1431
FEB.–25–82M
Printed in Japan