Robert C. Dobkin
National Semiconductor

FEBRUARY 1970

# op amp circuit collection

## section 1 — basic circuits

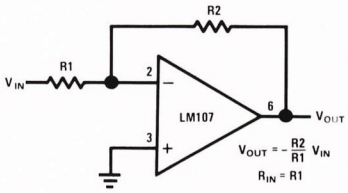


Inverting Amplifier

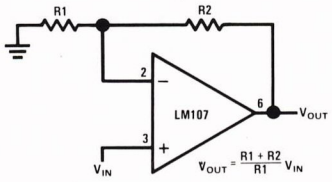


Non-Inverting Amplifier

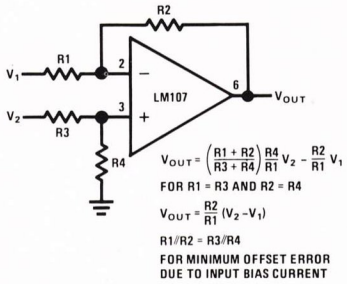


Difference Amplifier

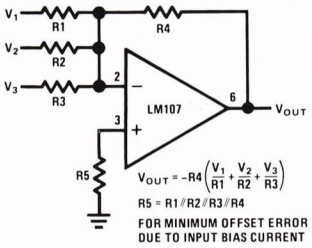


Inverting Summing Amplifier

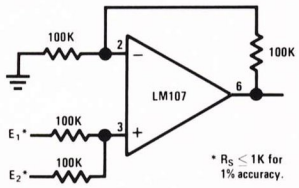


Non-Inverting Summing Amplifier

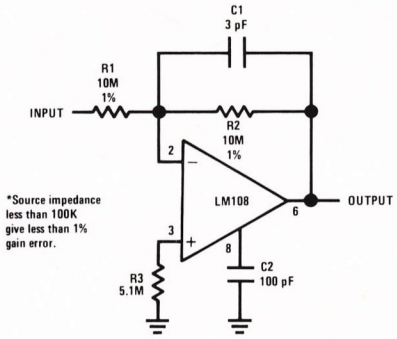


Inverting Amplifier with High Input Impedance

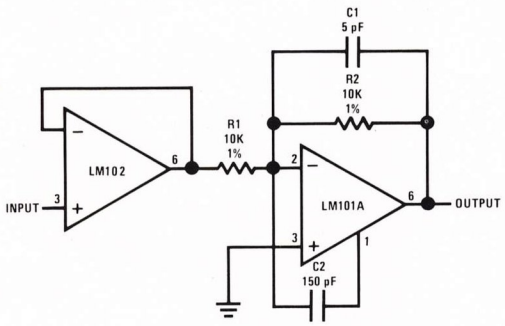


Fast Inverting Amplifier With High Input Impedance

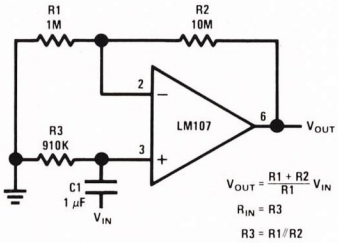


Non-Inverting AC Amplifier





PRINTED IN U.S.A.

op amp circuit collection

AN-31

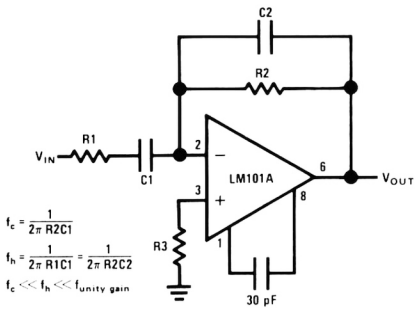


Practical Differentiator

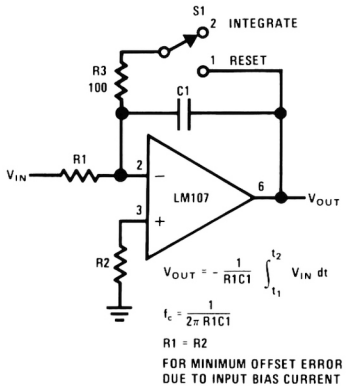


Integrator

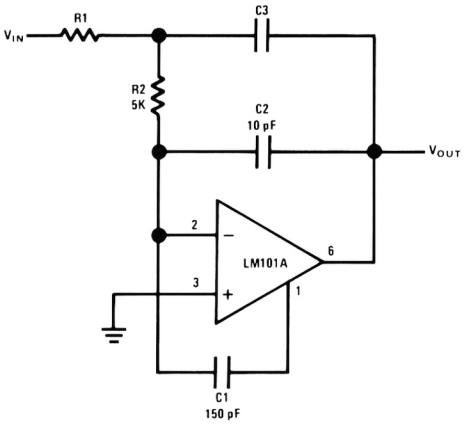


Fast Integrator

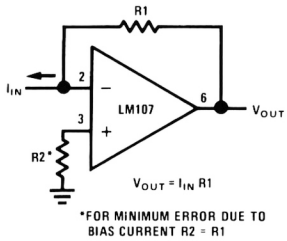


Current to Voltage Converter

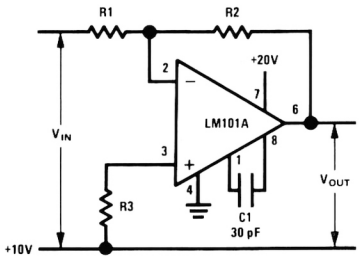


Circuit for Operating the LM101
without a Negative Supply

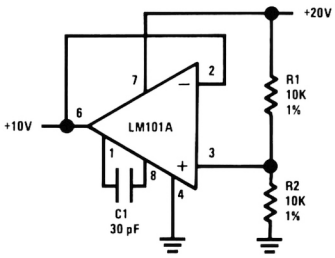


Circuit for Generating the
Second Positive Voltage

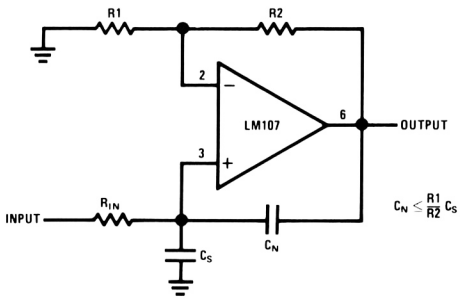


Neutralizing Input Capacitance to Optimize Response Time

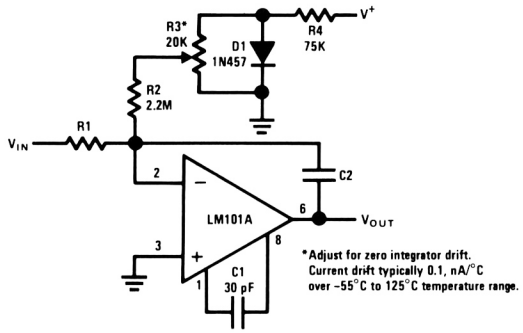


Integrator with Bias Current Compensation

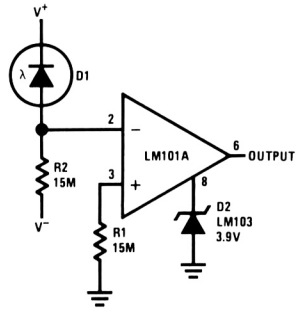


Threshold Detector for Photodiodes

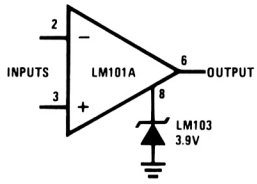


Voltage Comparator for Driving DTL or TTL Integrated Circuits

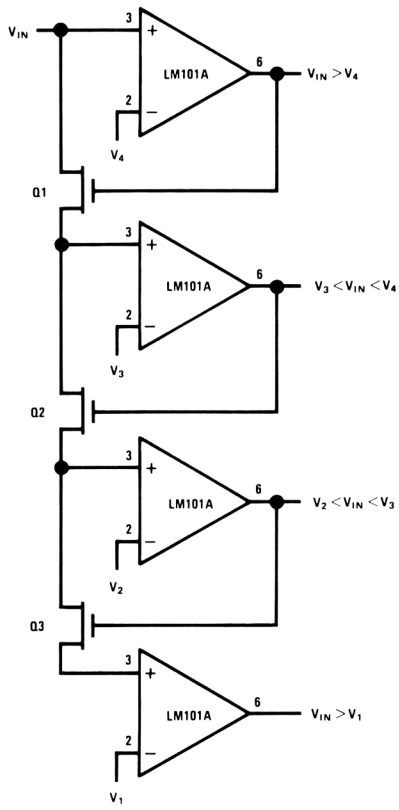


Multiple Aperture Window Discriminator

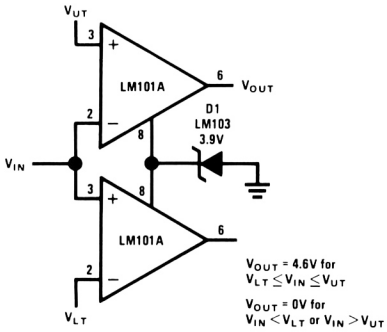


Double-Ended Limit Detector

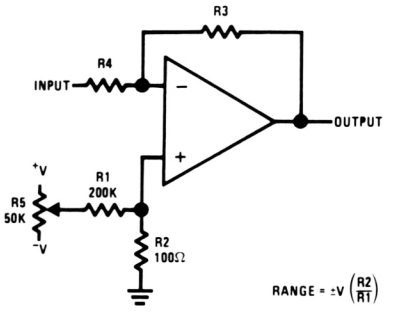


Offset Voltage Adjustment for Inverting Amplifiers Using Any Type of Feedback Element

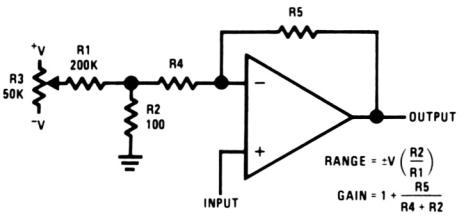


Offset Voltage Adjustment for Non-Inverting Amplifiers

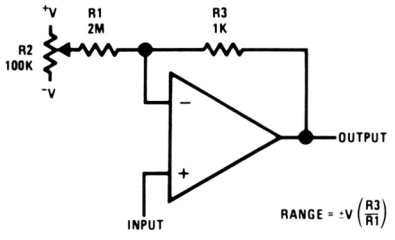


Offset Voltage Adjustment for Voltage Followers

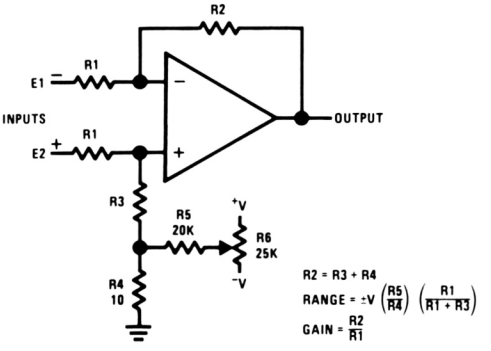


Offset Voltage Adjustment for Differential Amplifiers

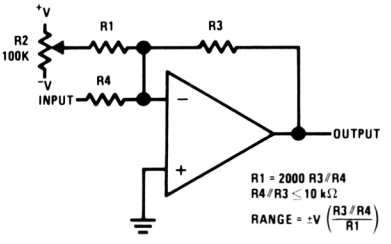


Offset Voltage Adjustment for Inverting Amplifiers Using 10 kΩ Source Resistance or Less

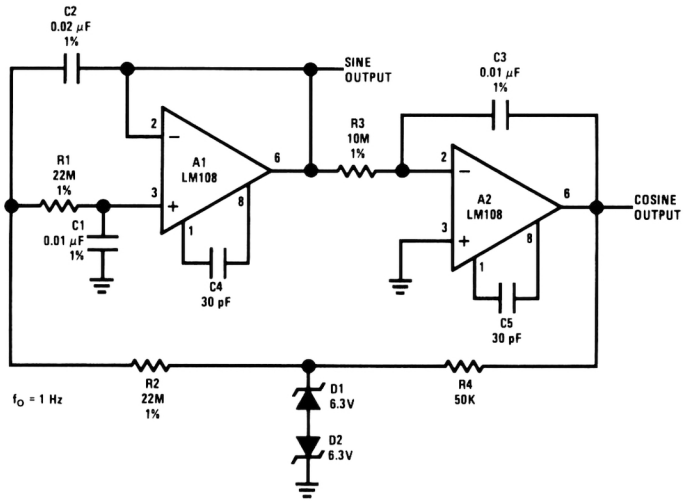


Low Frequency Sine Wave Generator with Quadrature Output

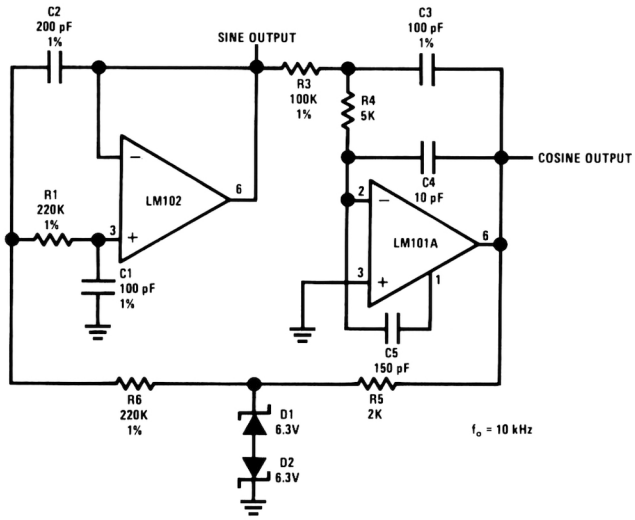


High Frequency Sine Wave Generator with Quadrature Output

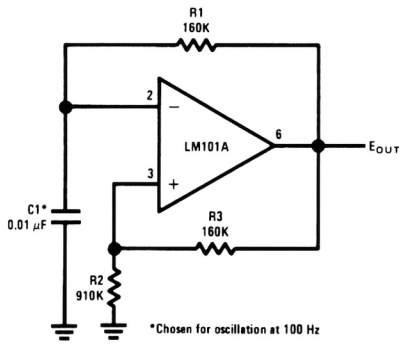


Free-Running Multivibrator

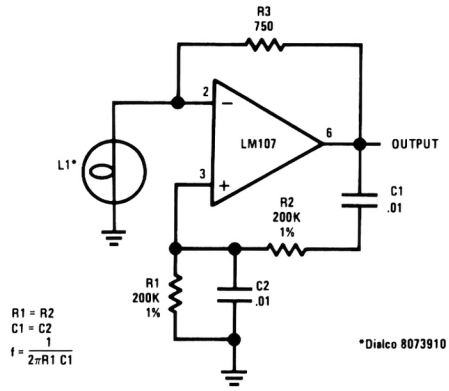


Wein Bridge Sine Wave Oscillator

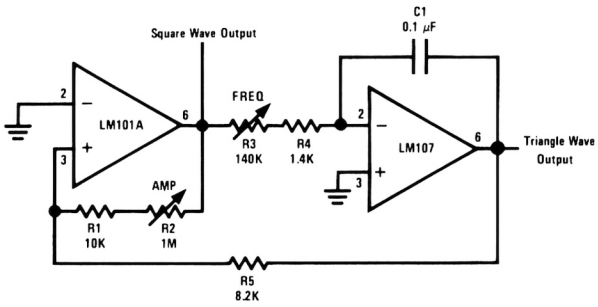


Function Generator

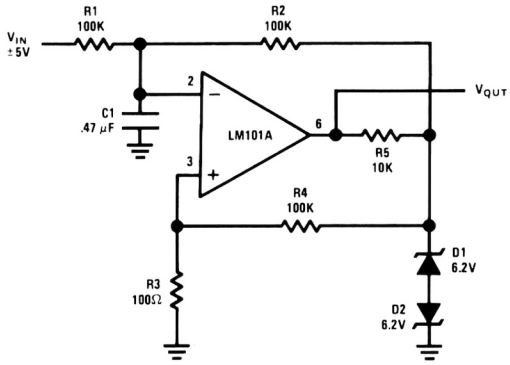


Pulse Width Modulator

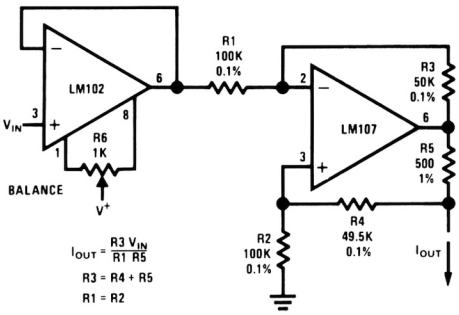


Bilateral Current Source

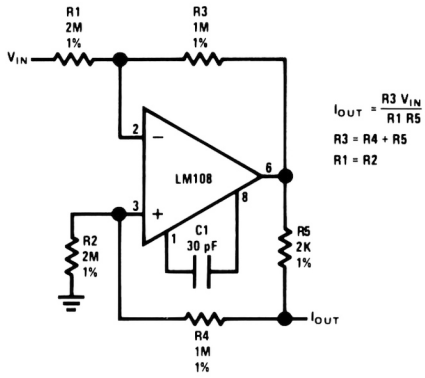


Bilateral Current Source

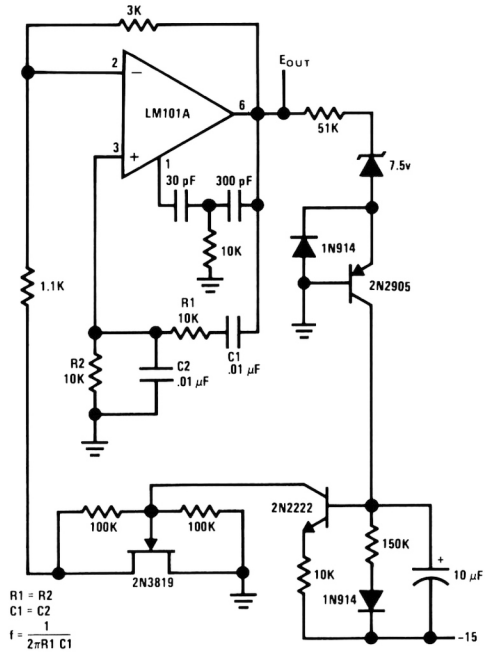


Wein Bridge Oscillator with FET Amplitude Stabilization

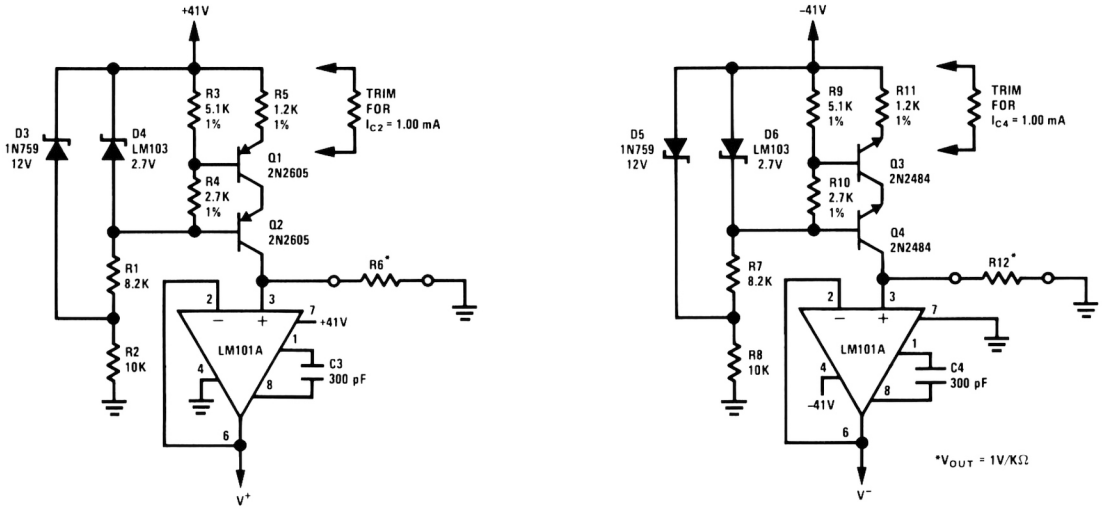


Low Power Supply for Integrated Circuit Testing

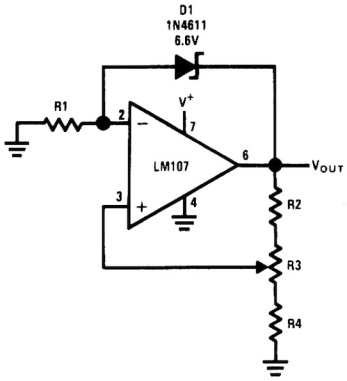


Positive Voltage Reference

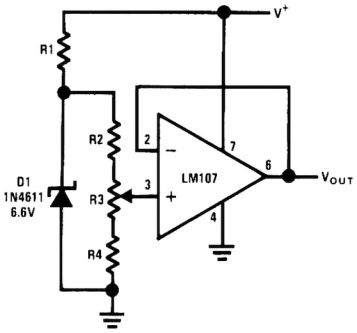


Positive Voltage Reference

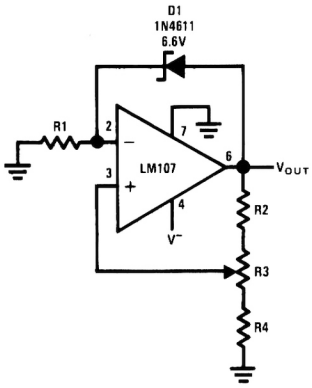


Negative Voltage Reference

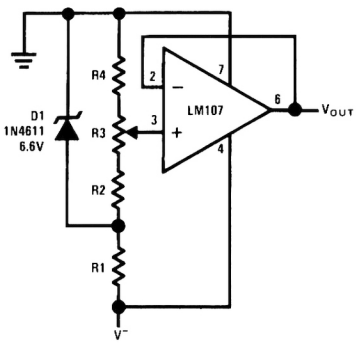


Negative Voltage Reference

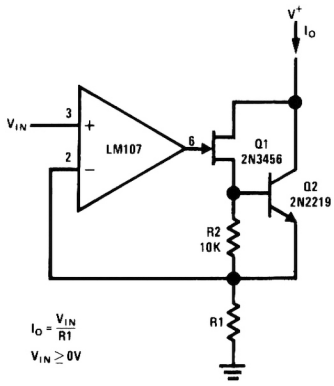


Precision Current Sink

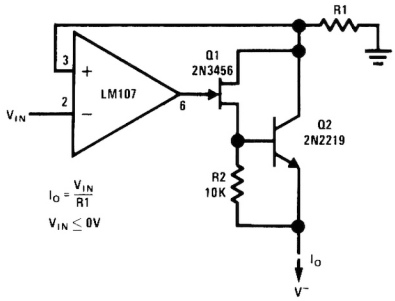


Precision Current Source

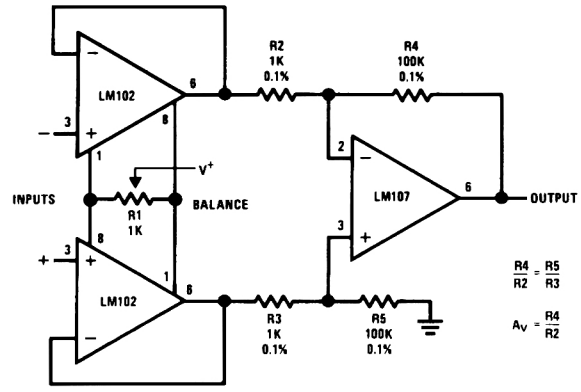


Differential-Input Instrumentation Amplifier

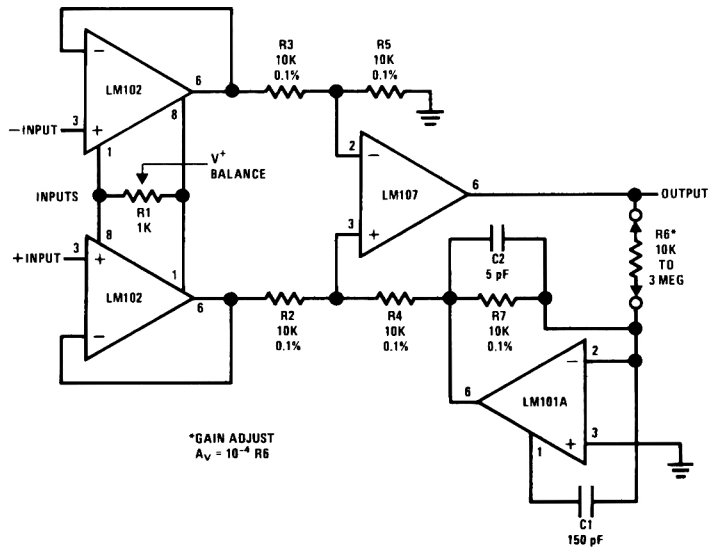


Variable Gain, Differential-Input Instrumentation Amplifier

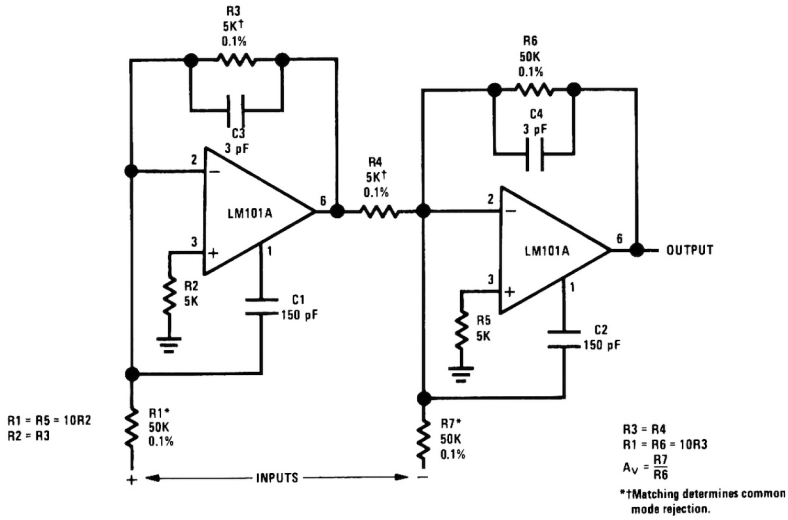


Instrumentation Amplifier with ±100 Volt Common Mode Range

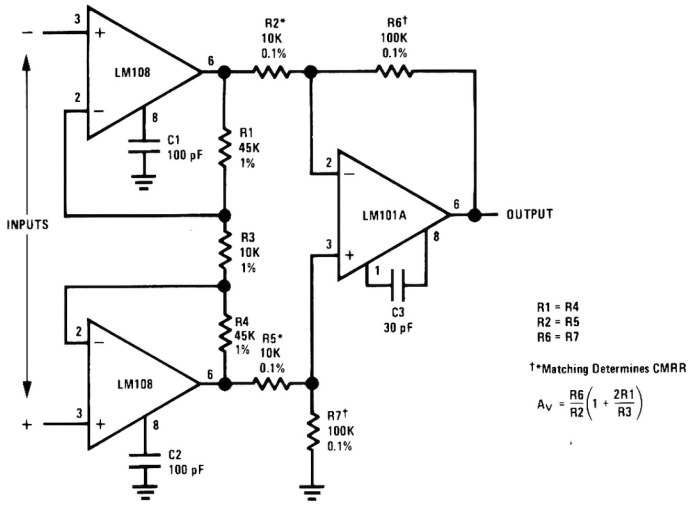


Differential Input Instrumentation Amplifier with High Common Mode Rejection

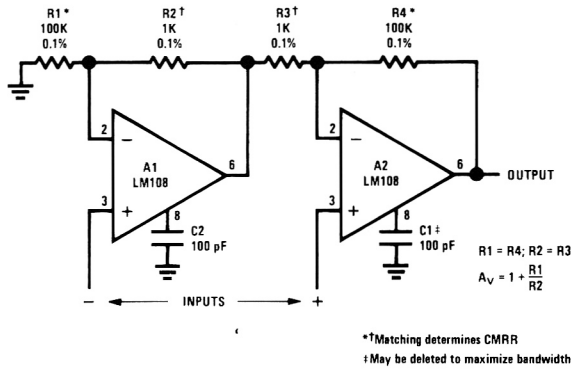


High Input Impedance Instrumentation Amplifier

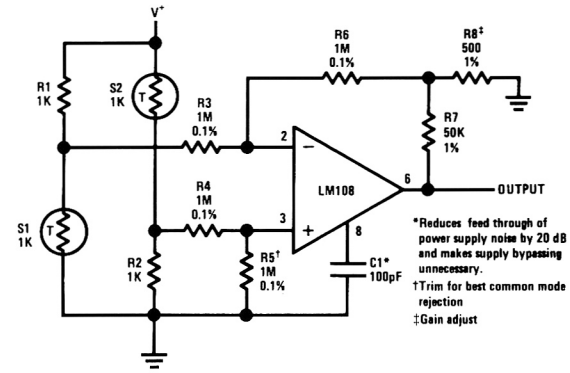


Bridge Amplifier with Low Noise Compensation

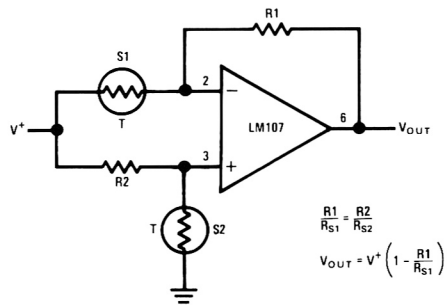


Bridge Amplifier

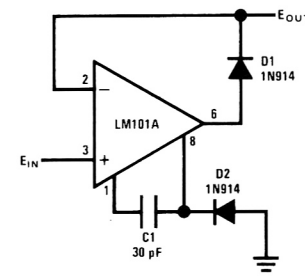


Precision Diode

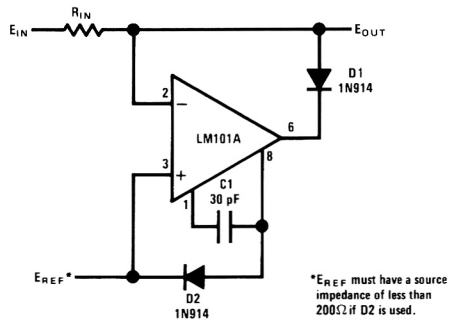


Precision Clamp

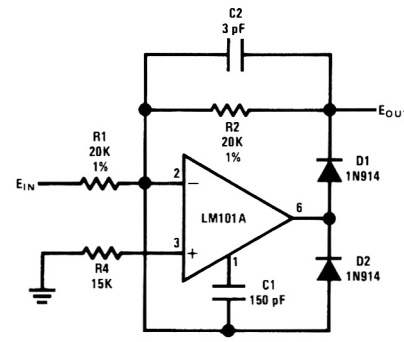


Fast Half Wave Rectifier

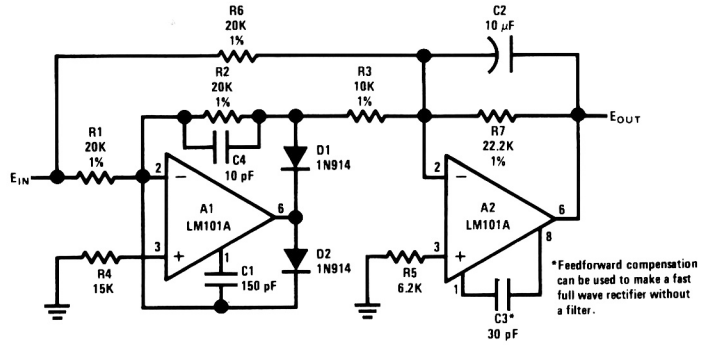


Precision AC to DC Converter

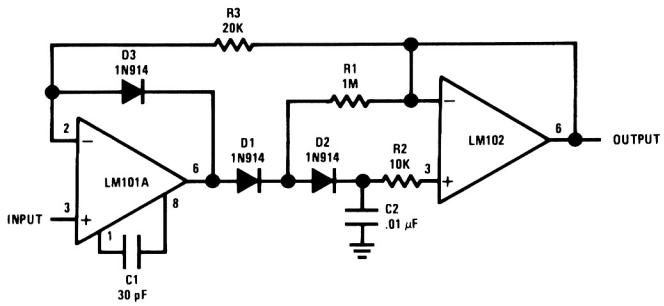


Low Drift Peak Detector

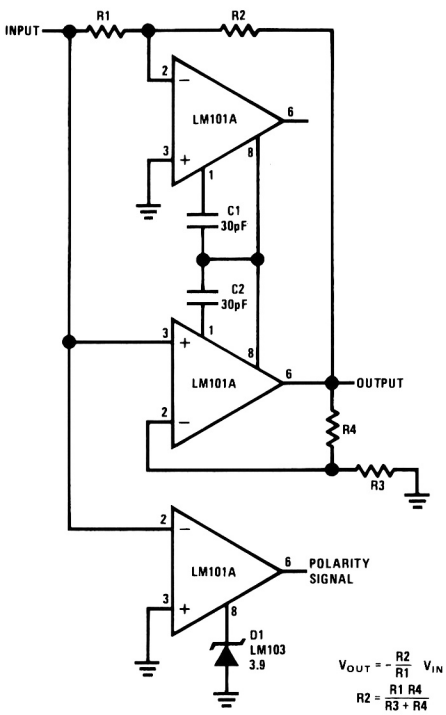


Absolute Value Amplifier with Polarity Detector

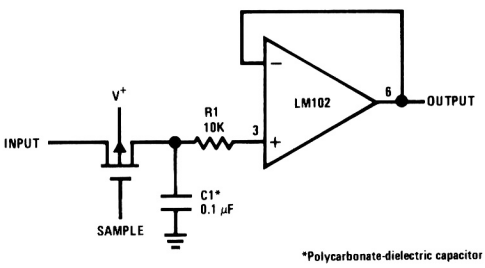


Sample and Hold

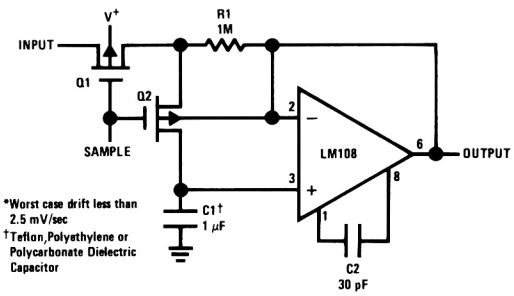


Sample and Hold

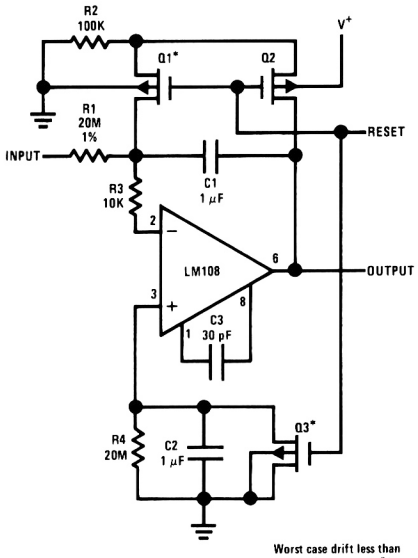


*Q1 and Q3 should not have internal gate-protection diodes.

Worst case drift less than 500 μV/sec over −55°C to +125°C.

**Low Drift Integrator**

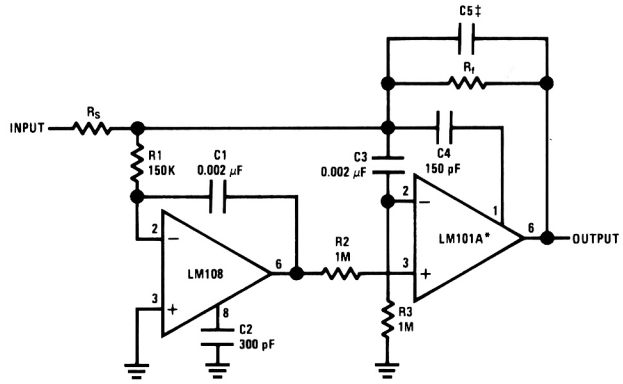


* In addition to increasing speed, the LM101A raises high and low frequency gain, increases output drive capability and eliminates thermal feedback.

† Power Bandwidth: 250 KHz
Small Signal Bandwidth: 3.5 MHz
Slew Rate: 10V/μs

‡ $C5 = \frac{6 \times 10^{-8}}{R_f}$

**Fast† Summing Amplifier with Low Input Current**

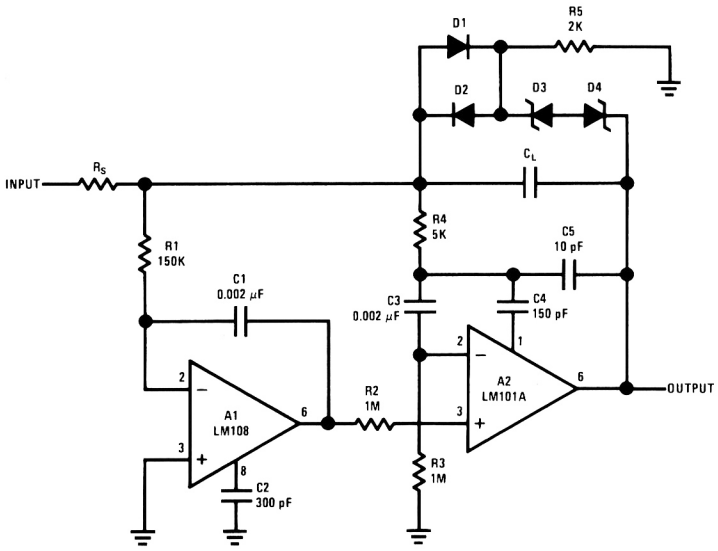


**Fast Integrator with Low Input Current**

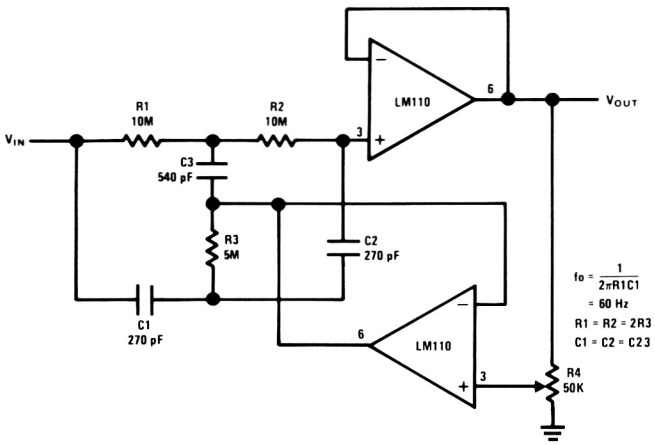


Adjustable Q Notch Filter

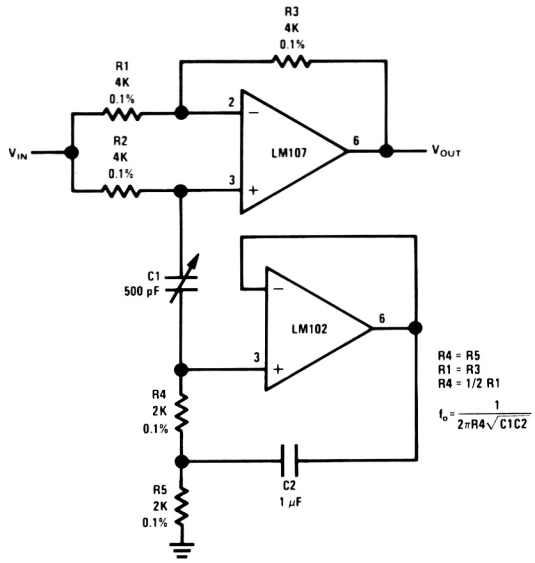


Easily Tuned Notch Filter

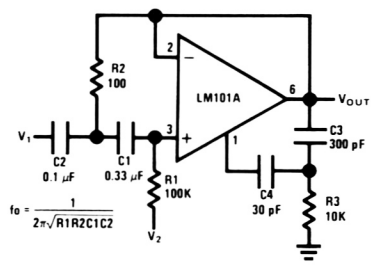


Tuned Circuit

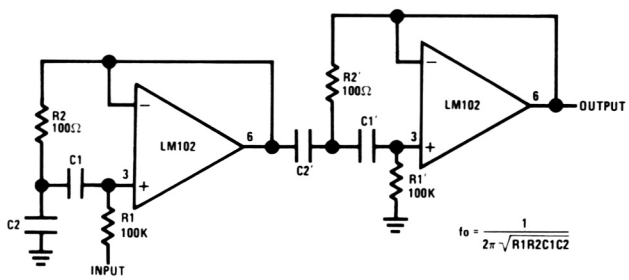


Two-Stage Tuned Circuit

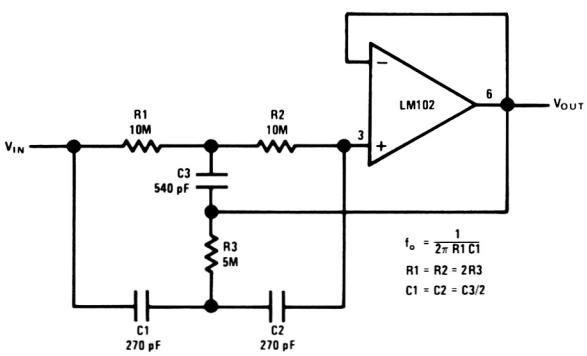


High Q Notch Filter

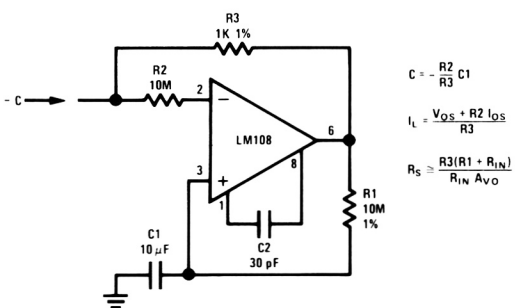


Negative Capacitance Multiplier

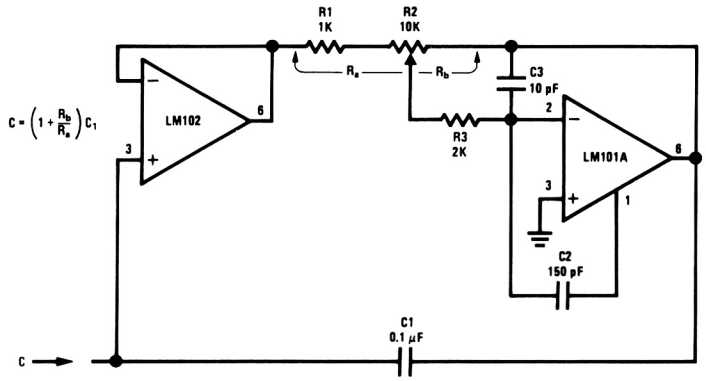


Variable Capacitance Multiplier

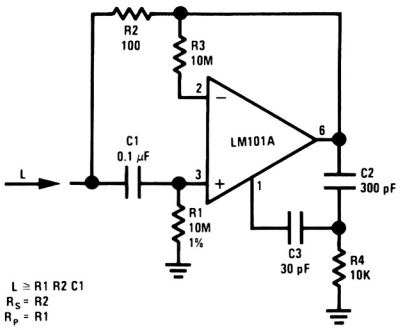


Simulated Inductor

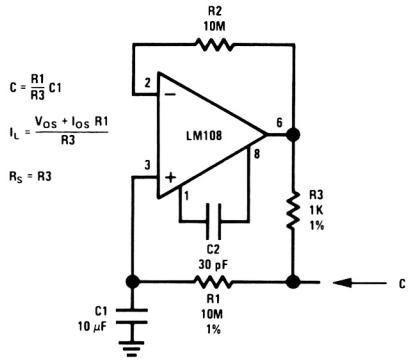


Capacitance Multiplier

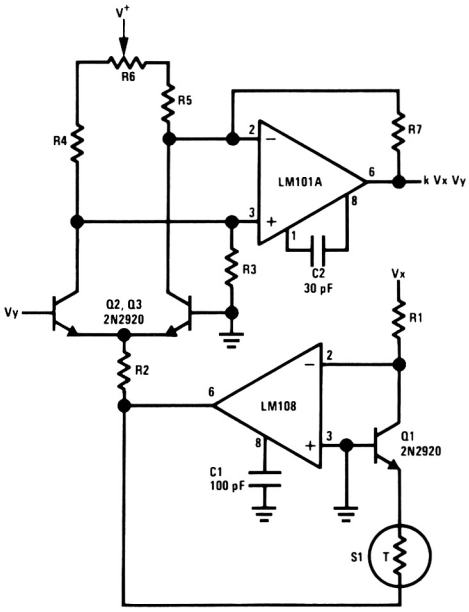


Two Quadrant Multiplier

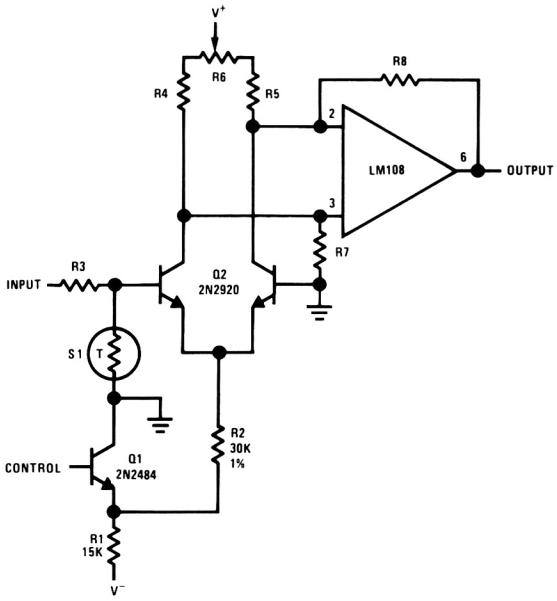


Voltage Controlled Gain Circuit

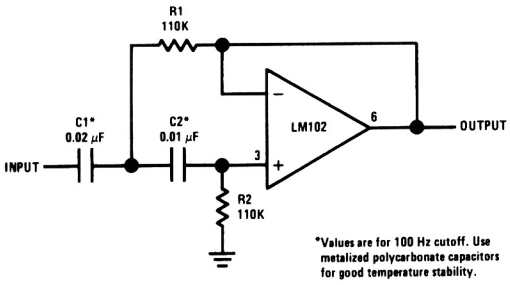


High Pass Active Filter

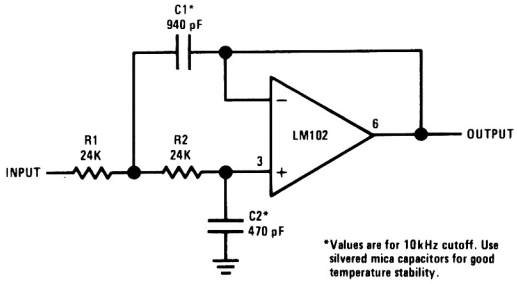


Low Pass Active Filter

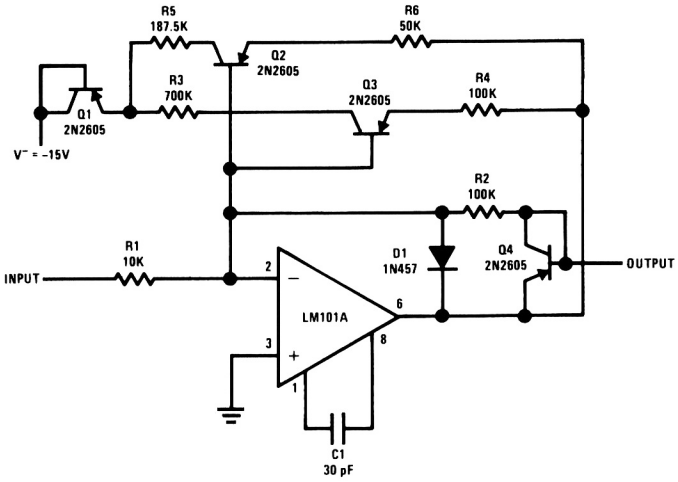


Nonlinear Operational Amplifier with Temperature Compensated Breakpoints

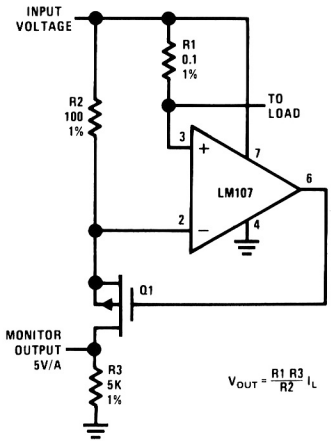


Current Monitor

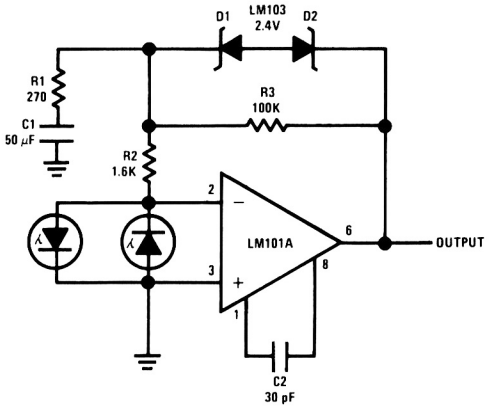


Saturating Servo Preamplifier with Rate Feedback

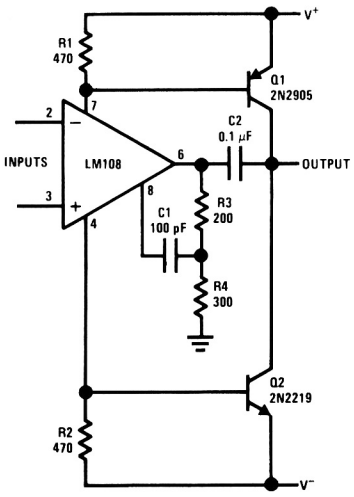


Power Booster

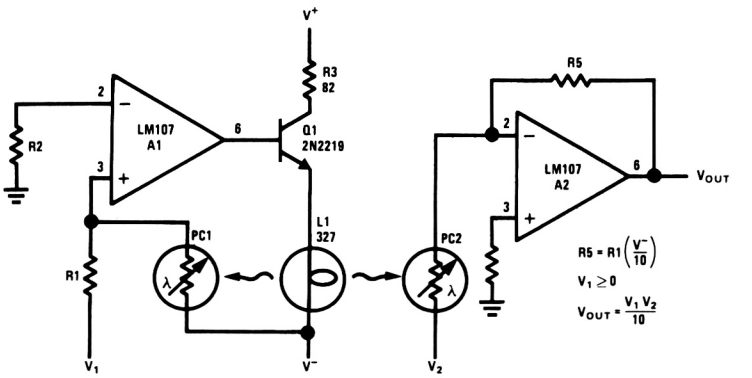


Analog Multiplier

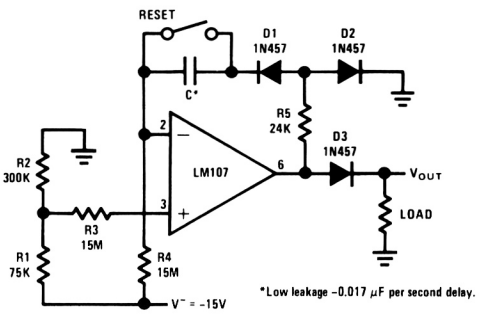


Long Interval Timer

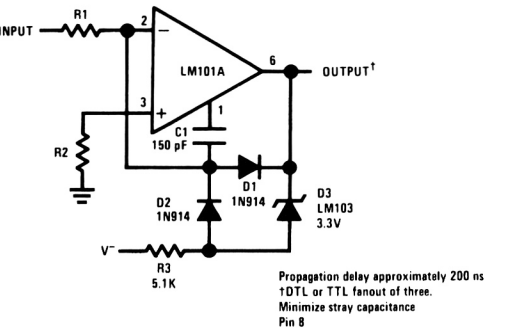


Fast Zero Crossing Detector

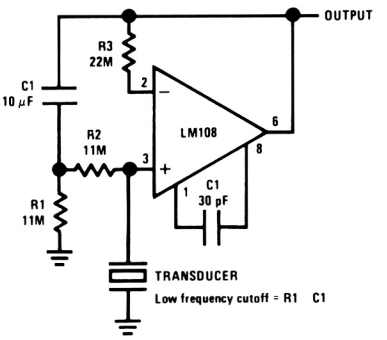


Amplifier for Piezoelectric Transducer

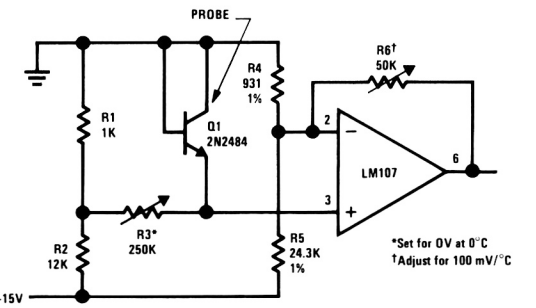


Temperature Probe

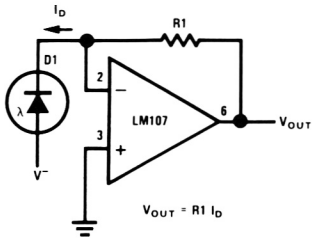


Photodiode Amplifier

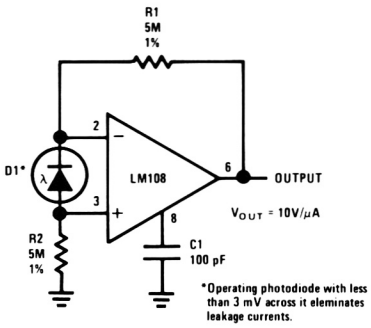


Photodiode Amplifier

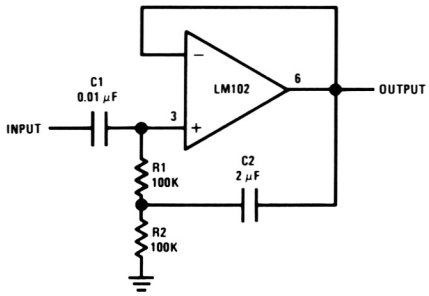


High Input Impedance AC Follower

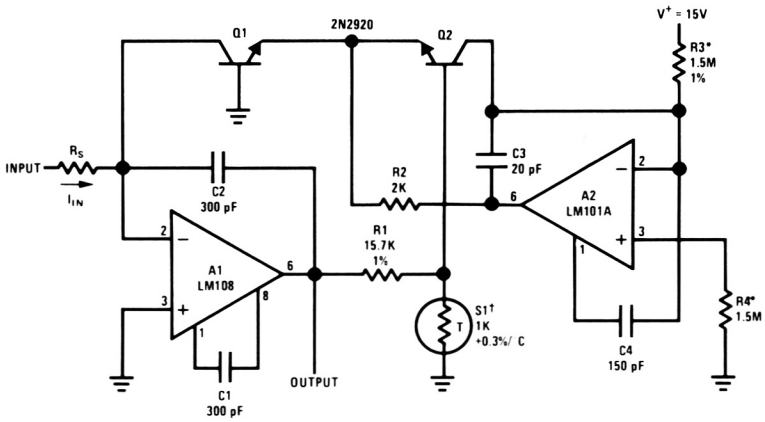


$10\ nA < I_{IN} < 1\ mA$
Sensitivity is 1V per decade.

†Available from Tel Labs, Inc., Manchester, N.H., Type Q81.

*Determines current for zero crossing on output: 10 μA as shown.

Temperature Compensated Logrithmic Converter

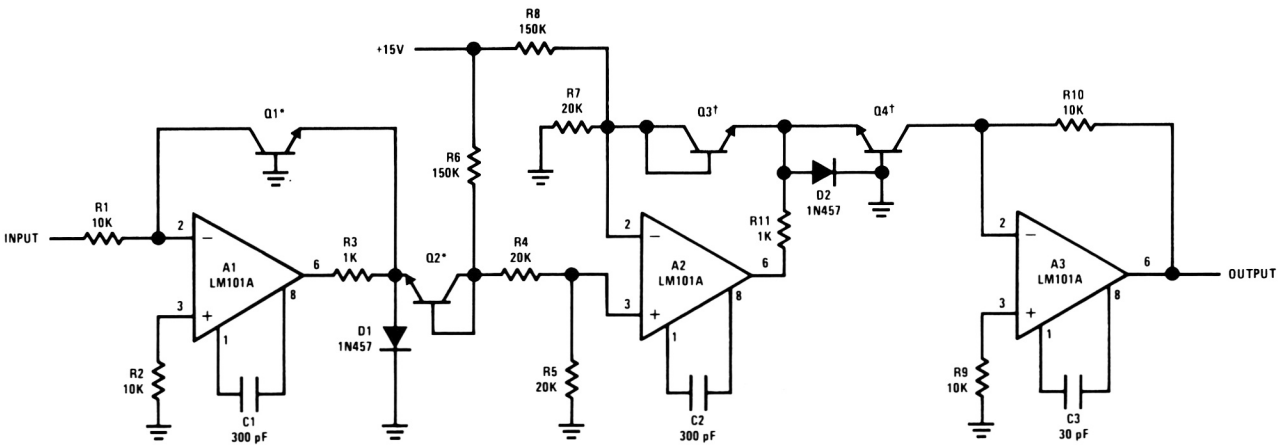


* †2N3728 matched pairs

Root Extractor

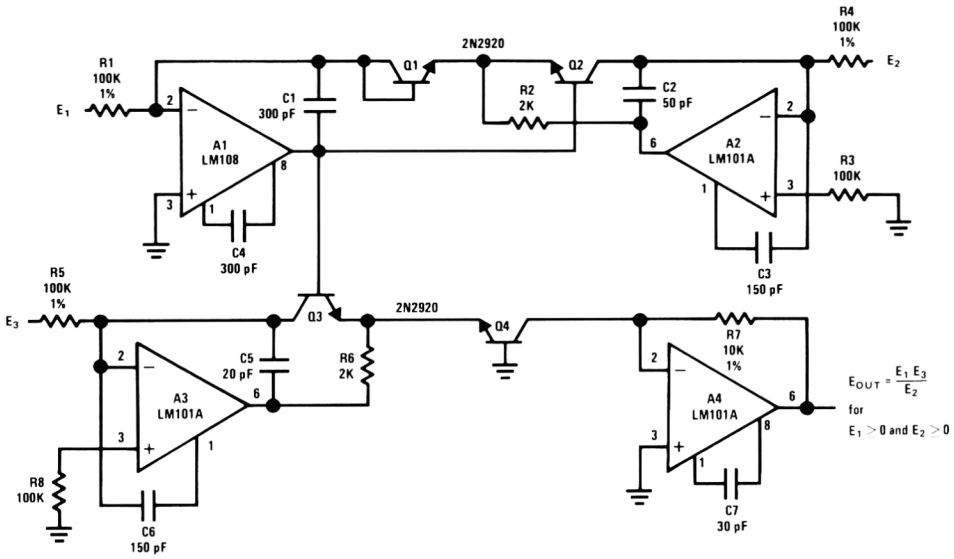


Multiplier/Divider

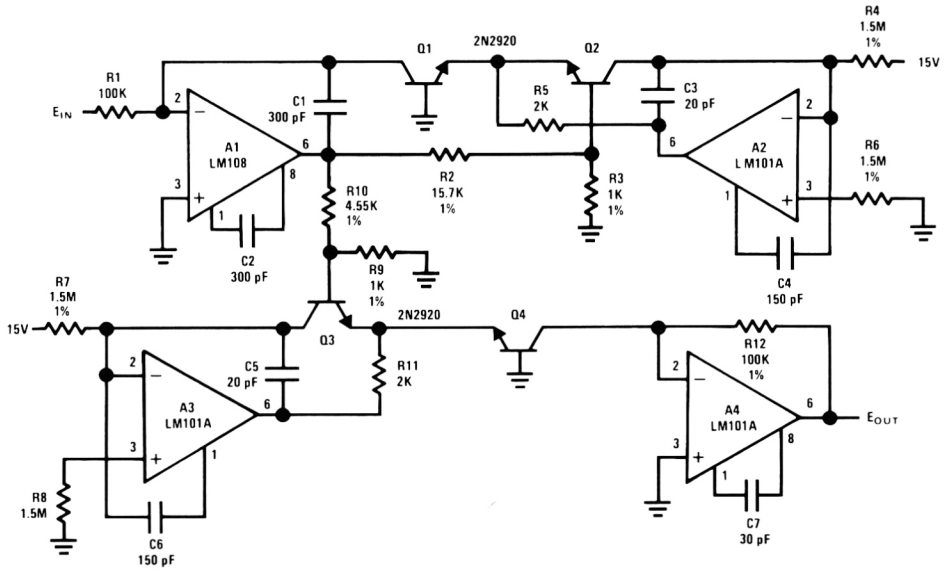


Cube Generator

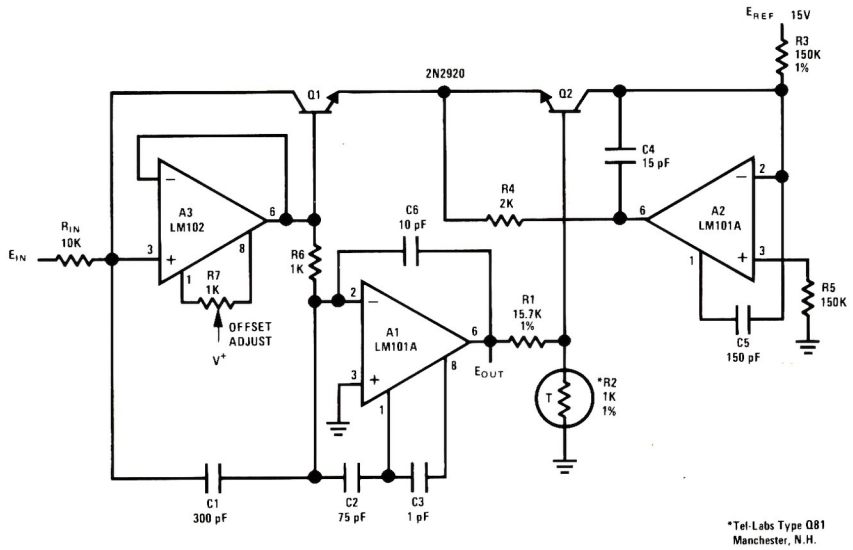


Fast Log Generator

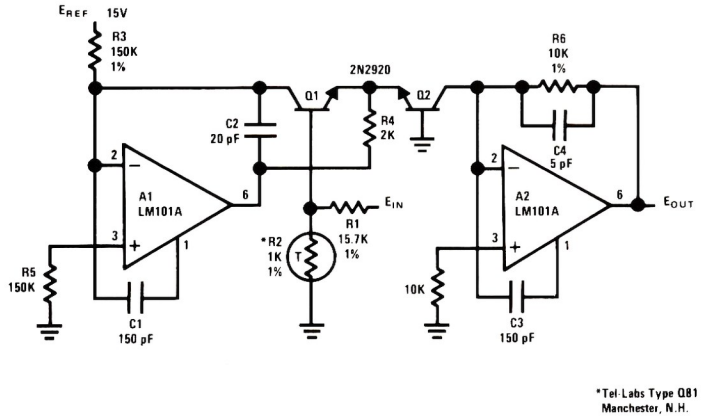


Anti-log Generator



**National Semiconductor Corporation**
2900 Semiconductor Drive, Santa Clara, California 95051
(408) 732-5000 / TWX (910) 339-9240